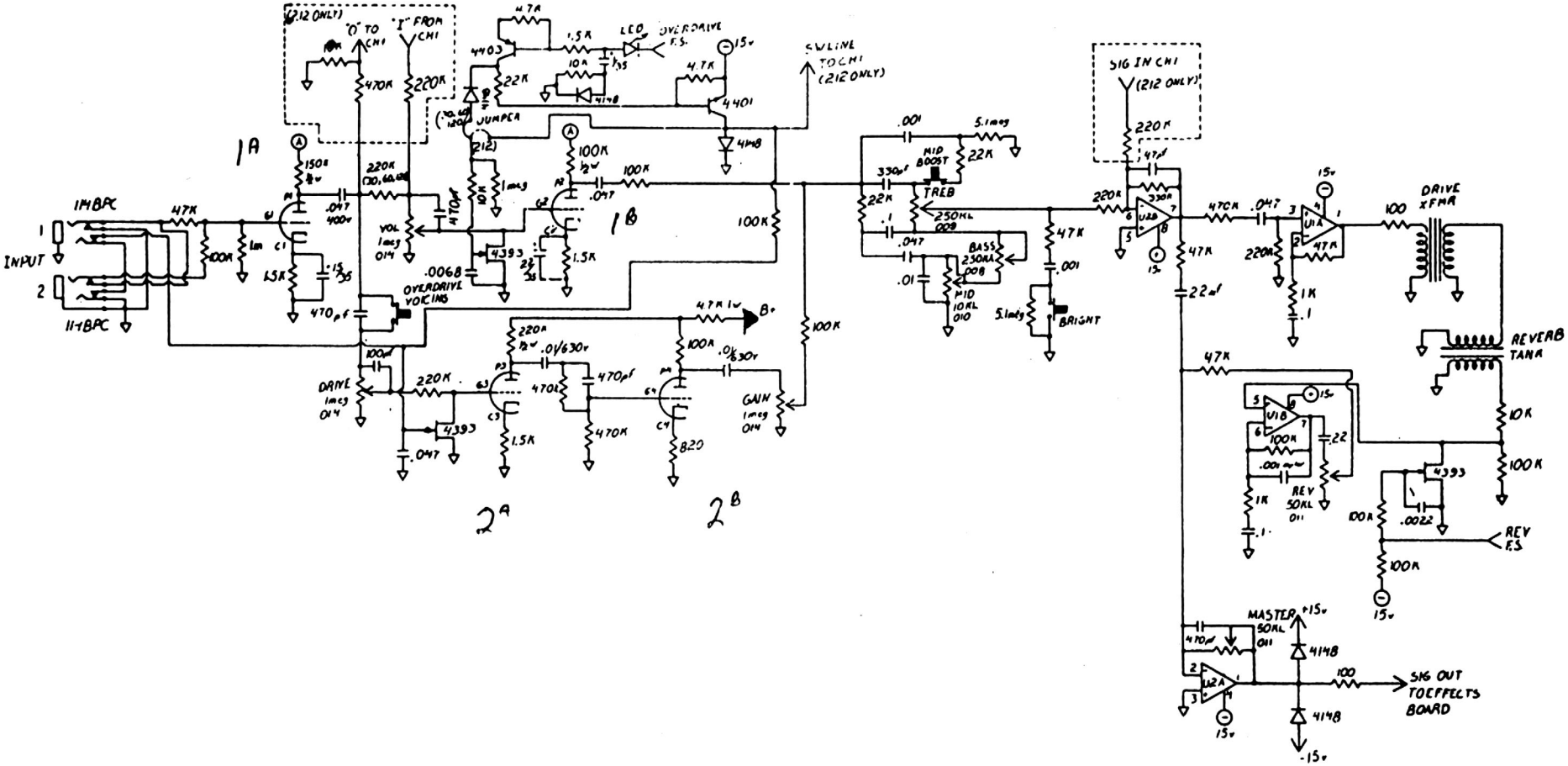
INPUT
1MBPC
11MBPC
1A
1B
2A
2B
(212 ONLY)
"O" TO CH1
"I" FROM CH1
JUMPER
OVERDRIVE VOICING
VOL 1meg 014
DRIVE 1meg 014
GAIN 1meg 014
LED
OVERDRIVE F.S.
SW LINE TO CH1 (212 ONLY)
MID BOOST
TREB
BASS
MID
BRIGHT
SIG IN CH1 (212 ONLY)
DRIVE XFMR
REVERB TANK
REV 50KL 011
REV F.S.
MASTER 50KL 011
SIG OUT TO EFFECTS BOARD
CD PRE
9-7-87